DRIVE TRAIN, PROP SHAFT - Z26NEY99A4/B4/A6/B6 (C703111)

2026 RZR - RZR XP S 1000 ULTIMATE (R01) - Z26NEY99A4/B4/A6/B6

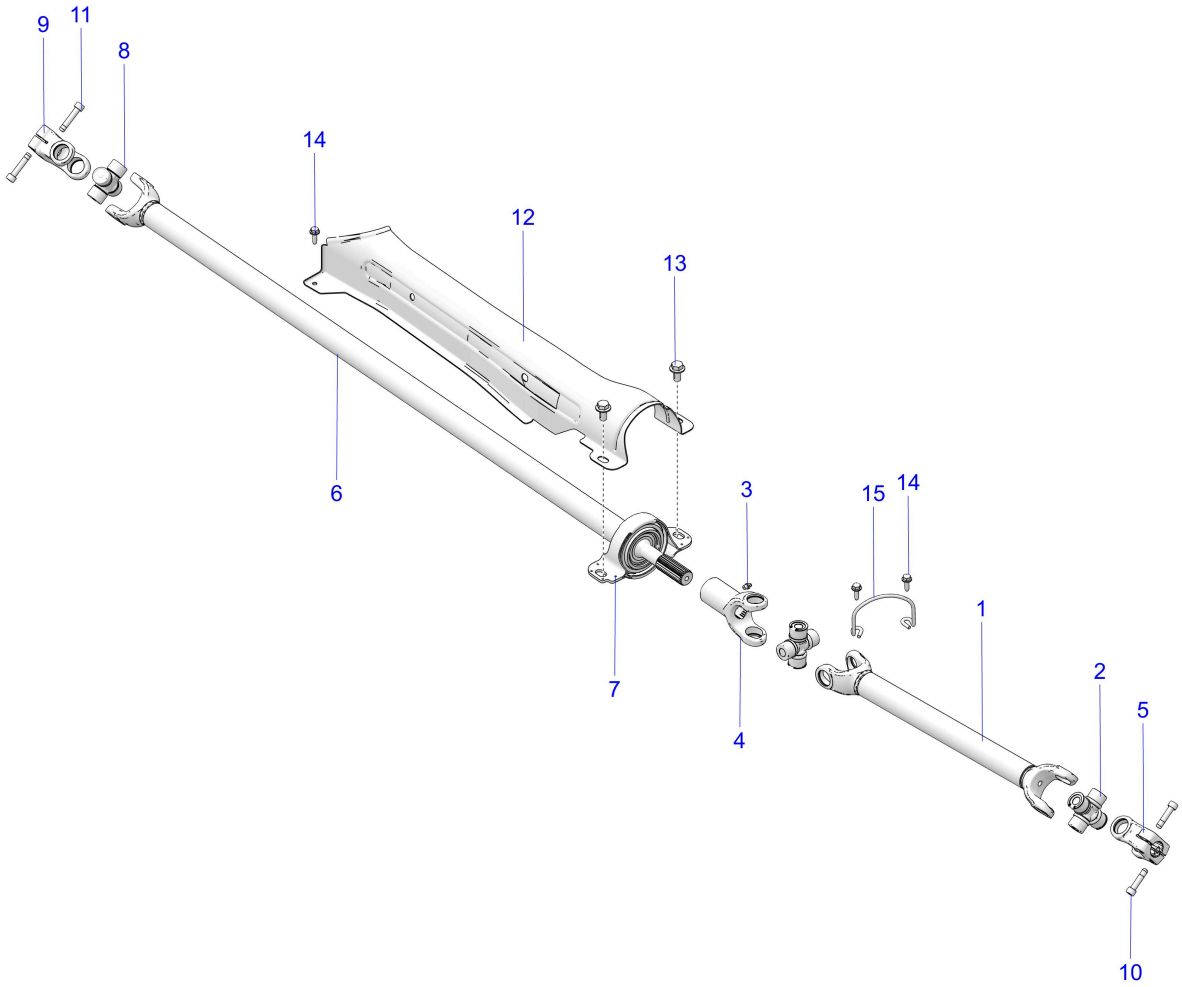

© 2025 Polaris Industries Inc.

C760064

Reference #	*Part#*	*Description*	*Quantity*
1	1337400	ASM-PROPSHAFT,FRONT [INCLUDES 2-5]	1
2	2208142	K-CROSS & BEARING,NONGREASE	2
3	7080424	FITTING-LUBRICATION 1/4-28	1
4	3239802	SLIP YOKE,PROPSHAFT	1
5	3239817	PINCH YOKE,PROPSHAFT	1
6	1337309	ASM-PROPSHAFT,REAR [INCLUDES 7-9]	1
7	3515901	CENTER BEARING,PROPSHAFT	1
8	3239804	UNIVERSAL JOINT,PROPSHAFT	2
9	3239805	PINCH YOKE,PROPSHAFT	1
10	7518347	SCREW-SH-M8X1.25X35 8.8 ZPC NYL	2
11	7521289	SCR-SH-M8X1.25X40 10.9 SFB	2
12	5268728-329	BRKT-TANK SUPPORT,INNER,ECOAT	1
13	7518460	SCR-HXFL-M10X1.5X20 8.8 Z NYL	2
14	7518529	SCR-M6X1.0X20,HXHD,FLG,TDFM,BK	3
15	5340595	HOOP-PROPSHAFT	1

Copyright 1996-2026 Polaris Industries U.S.A All rights reserved.